AI 600BP平衡機使用手冊

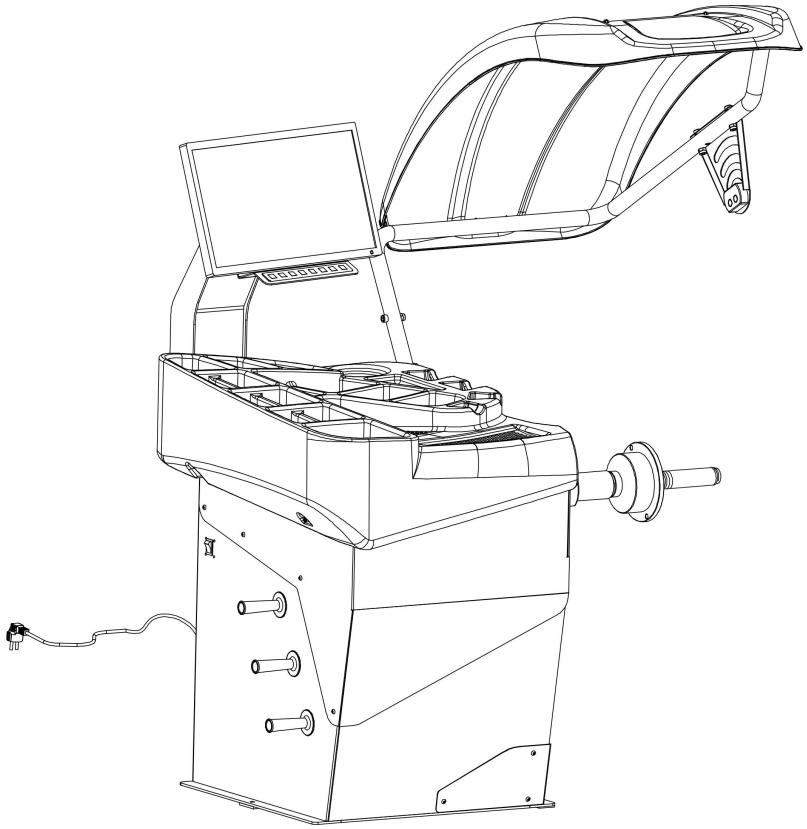

User manual

Warning

- This manual is a necessary part of the product. Please read carefully.
- Keep the manual for later use when maintaining the machine.
- This machine can only be used for the designated purposes. Never use it for any other purpose.
- The manufacturer is not responsible for the damage incurred by improper use or use other than the intended purpose.

Precaution

- The equipment can only be operated by qualified personnel with special training. Modification to any components or parts, or use the machine for other purpose without either obtaining the agreement from the producer, or observing the requirement of the instructions may lead to direct or indirect damage to the equipment.

★ The equipment should be installed on the stable ground, not wooden pallet, otherwise not accurate.

- Keep the back panel 0.6M away from the wall for good ventilation. Enough room should be left on both sides for convenient operation.
- Do not put the equipment a place with high temperature or moisture, or near the heating system, water tap, air-humidifier or chimney.
- Avoid lots of dust, ammonia, alcohol, thinner or spraying binder.
- People who are no operating the machines should be kept away when it is used.
- Use appropriate equipment and tools, protective and safety equipment, including eyeglasses, earplugs and working boots.
- Pay special attention to the marks on the machine.
- Do not touch or approach the moving parts by hand during operating.
- Do not remove the safety device or keep it from working properly.

Contents

1. General----------1
2. Machine assembly----------1
3. Controls and components----------3
4. Indication and use of wheel balancer----------5
5.Self-diagnoses/Setting machine/Self-calibration----------12
6. Errors----------14
7. OPT function ----------19
8. Spare parts list and Exploded drawings ----------17

1. General

1.1. Technical data：

- Max wheel weight：70kg
- Power：0.2kw;0.37kw
- Power supply: 220v;50/60hz
- Balancing accuracy： ±1g
- 10balancing modes: DYN, ALU1, ALU2, ALU 3，ALU 4，ALU5，ALU-S1, ALU-S2, Moto-1, Moto-2
- Balancing speed：200r/min
- Cycle time：8s
- Rim diameter：10〃～29〃(256mm～966mm)
- Sound pressure level during work cycle：<70db

1.2. Features：

- Distance and diameter value input automatically
- Laser helped 6 o'clock position indictaion under ALU-S mode
- Statistic and dynamic balancing, ALU-programs for alloy rims or special shaped
- Self diagnoses, easy to find the problem
- Apply to steel and aluminum alloy rim

1.3. Working environment：

- Temperature：5～50℃
- Height：≤4000m

2． Machine assembly

2.1. Unpack

Unpack the carton, check if missing any spare parts.

No.	Item	Qty
1	Width gauge	1
2	Conic No.1	1
	Conic No.2	1
	Conic No.3	1
	Conic No.4	1
3	Quick relase nut	1
4	Thread hub	1
5	Bowl for quick nut	1
6	Pad for bowl	1
7	Balancing hammer	1
8	100g weight	1
9	Allen wrench	1

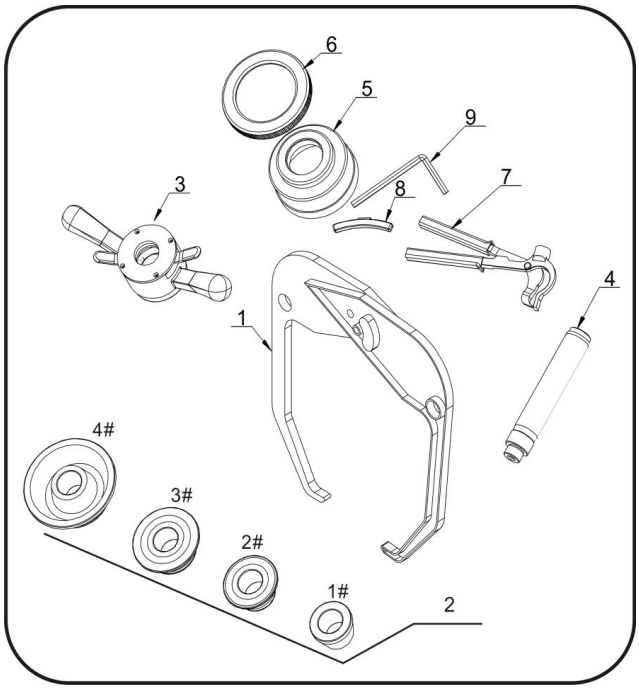

2.2. Install

- The equipment should be installed on the stable ground, not wooden pallet, otherwise not accurate.
- Keep the back panel 0.6M away from the wall for good ventilation. Enough room should be left on both sides for convenient operation.

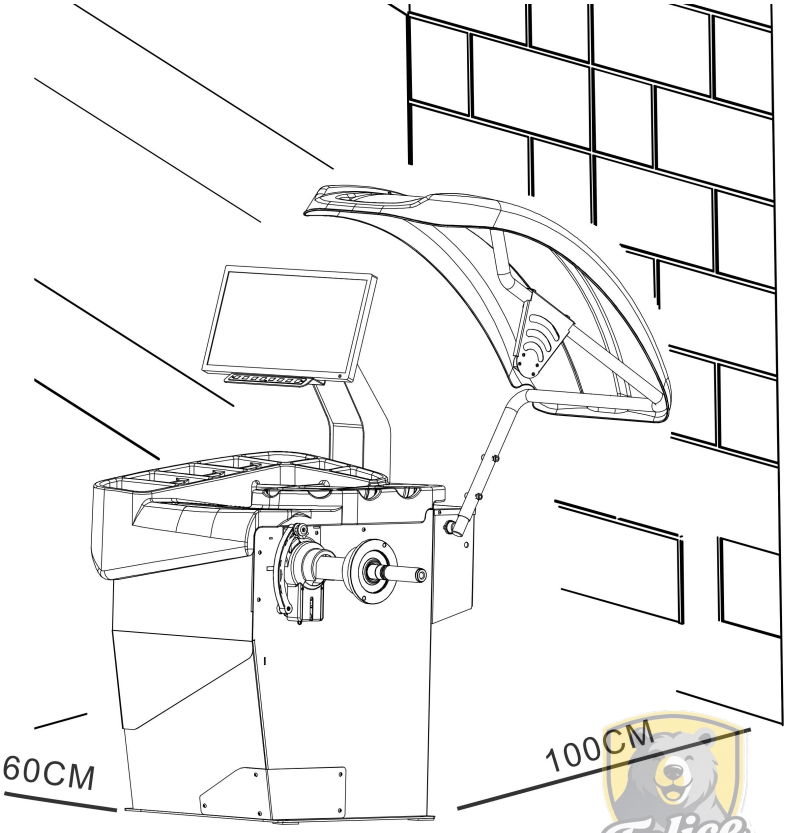

2.3. Fix balancer to floor with screws on the bottom.

2.4. Install adaptor

The wheel balancer is supplied complete with cone type adaptor for fastening wheel with central bore. (see below picture)

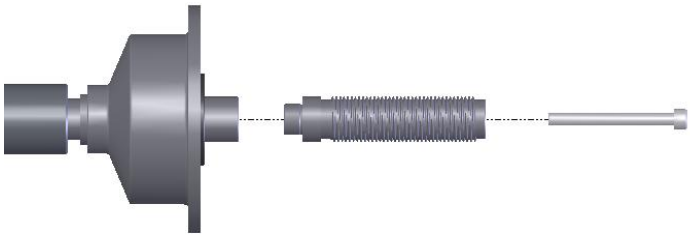

2.5. Install wheel

Clean wheel, take off counterweights, check pressure of wheel.

Choose the way of installation according to the type of wheel.

Main shaft-wheel—suitable cone(small head towards inside)—quick handle nut

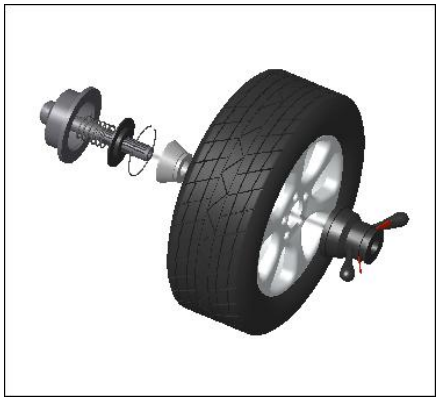

Main shaft-suitable cone(big head towards inside)—wheel—quick handle nut

Attention：May add a wheel, and hold the wheel to help install the thread hub. When installing or taking off wheel, do not let wheel move on the shaft, to avoid scratching shaft.

3. Controls and components

No.	Item	Standard/Optional
A	Switch	**S**
B	Cover with tool tray	**S**
C	Gauge head	**S**
D	Main shaft	**S**
E	Pedal breaker	**S**
F	Safe guard	S
G	Screen	S
H	Key board	S
J	Width Gauge	S
K	LASER	S

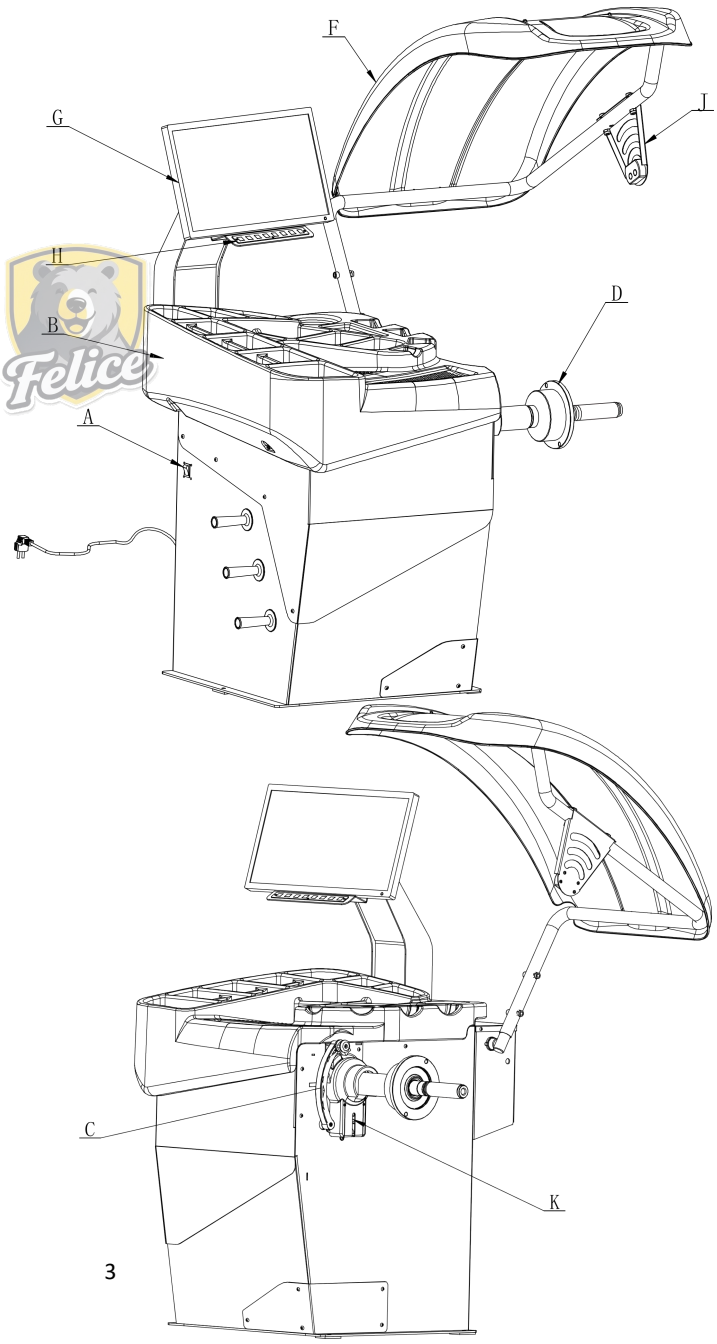

Screen (G)

1. Inside amount of unbalance
2. Outside amount of unbalance
3. Balancing mode
4. Operating unit
5. Inside unbalance position indicator
6. Outside unbalance position indicator
7. Illustrated unbalance position
8. Function buttons to choose

Eight balancing modes

inside	Icon	outside	Balancing mode	Operation	Add weights
12 o'clock		12 o'clock	Default	1.Turn on machine 2.Input a,b,d value 3.Start spin, after spin stop	Clip on weights on both sides of rim edge
6 o'clock		6 o'clock	ALU1	1.Turn on machine 2.Input a,b,d value 3.Press【◀】button, indicator lit up 4.Start spin, after spin stop	Add adhesive weights on the rim shoulder both sides
12 o'clock		6 o'clock	ALU2	1.Turn on machine 2.Input a,b,d value 3.Press【◀】button, indicator lit up 4.Start spin, after spin stop	Clip on weight on inside rim edge, add adhesive weight on outside rim shoulder
6 o'clock		12 o'clock	ALU3	1.Turn on machine 2.Input a,b,d value 3.Press【◀】button, indicator lit up 4.Start spin, after spin stop	Add adhesive weights on the rim shoulder both sides

12 o'clock		12 o'clock	ALU4	1.Turn on machine 2.Input a,b,d value 3.Press【◀】button, indicator lit up 4.Start spin, after spin stop	Clip on weight on inside rim edge, add adhesive weight on outside rim shoulder
6 o'clock		12 o'clock	ALU5	1.Turn on machine 2.Input a,b,d value 3.Press【◀】button, indicator lit up 4.Start spin, after spin stop	Add adhesive weight on inside rim shoulder, clip on weight on outside rim edge
6 o'clock		6 o'clock	ALUS-1	1. Turn on machine 2. Input aI,aE,d value 3. Start spin, after spin stop	Add adhesive weights on the two positions gauge head touch
12 o'clock		6 o'clock	ALUS-2	1. Turn on machine 2. Input aI,aE,d value 3. Start spin, after spin stop	Add adhesive weights on the two positions gauge head touch
12 o'clock		12 o'clock	Moto-1	1.Turn on machine 2.Input a,b,d value 3.Press【◀】button, indicator lit up 4.Start spin, after spin stop	Add adhesive weight
12 o'clock		12 o'clock	Moto-2	1.Turn on machine 2.Input a,b,d value 3.Press【◀】button, indicator lit up 4.Start spin, after spin stop	Add adhesive weights on the rim shoulder both sides

Key board

4. Indication and use of wheel balancer

Icon	Function	Icon	Function
^	Data key/menu confirmation	v	Choose/ Search for location
<	Selection of "ALU" modes / Left click	>	Right click
START	Start	STOP	Stop/Cancel/ brake

4.1. DYN (Standard/Default) mode

4.1.1. Clean wheel, take off counterweights, check pressure of wheel.Choose the way of installation according to the type of wheel.

Main shaft-wheel—suitable cone(small head towards inside)—quick handle nut

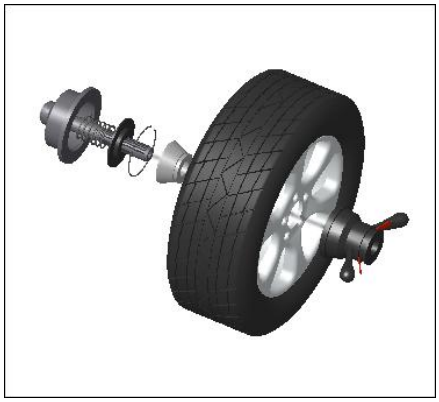

Main shaft-suitable cone(big head towards inside)—wheel—quick handle nut

Attention：May add a wheel, and hold the wheel to help install the thread hub. When installing or taking off wheel, do not let wheel move on the shaft, to avoid scratching shaft.

4.1.2. Turn on machine

4.1.3. Input a b d value

Turn on machine, choose right way to install wheel according to the type of wheel. Set "a" "b" "d" values:

- Set "a" value：move the gauge to measuring position as illustrated as Fig.1, hold the gauge still in position for approx. 4 seconds, successful memorization is given, then return the gauge to position 0.(The value measured in automatic mode appear on the display). Or press > and ^ and v to change.
- Set "b" value：set nominal diameter "b" marked on the wheel or use the width gauge to measure the value of "b" as Fig.2a, then press > and ^ and v to change. If the balancer is with optional automatic width ruler, let the gauge head touch the rim as Fig.2b, until there is a sound, means successful memorization is given, then release the gauge.
- Set "d" value： this value measured in automatic mode same time as "a" value setting, or press

and and to change.

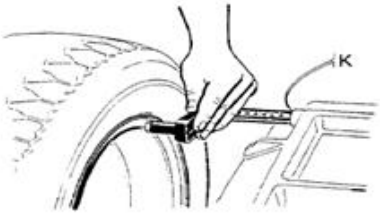

Fig.1

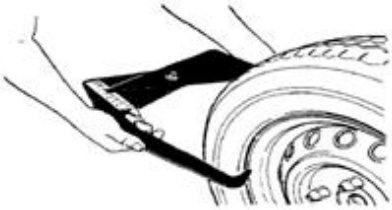

Fig.2 a

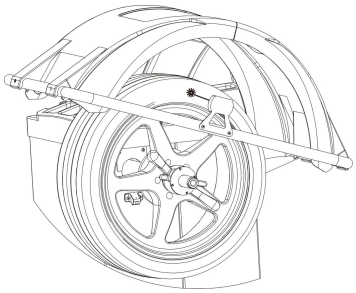

Fig.2 b

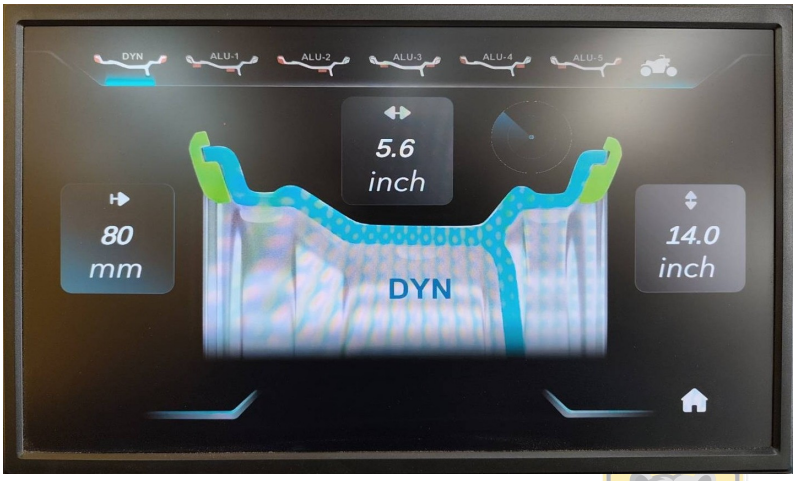

4.1.4. Put down the guard and press START to perform a measuring spin.

4.1.5.In a few seconds the wheel is brought to operating speed and begin measuring unbalance, the unbalance values remain on instruments 1 and 3 when the wheel stopped. Press , select , and then press may check the real unbalance value under threshold.

4.1.6. Press , until the right LED lit up full, clip weight on 12 o'clock position (Fig.3)

4.1.7 Press , until the left LED lit up full, clip weight on 12 o'clock position (Fig.4)

Fig.3

Fig.4

4.1.8. After finishing cliping the counterweights, put down the guard and press START , to perform balancing spin again,

if comes out 00 00，means balancing succeed. (Fig.5)

Fig. 5

4.2. ALU-1 mode (ALU-1, ALU2, ALU 3，ALU 4，ALU5, same operation, only the position to add weights different)

4.2.1. Set “a” “d” “b” values

4.2.2. Press until ALU1 indicator lit up

4.2.3. Put down the guard and press START to perform a measuring spin.

4.2.4. In a few seconds the wheel is brought to operating speed and begin measuring unbalance, the unbalance values remain on instruments 1 and 3 when the wheel stopped. Press , select , and then press may check the real unbalance value under threshold.

4.2.5. Press , the displays with right LED’s lit up full indicate the correct angular position where to mount the counterweights, 6 o’clock position outside, as Fig.6, add the counterweight.

4.2.6. Press , the displays with left LED’s lit up full indicate the correct angular position where to mount the counterweights, 6 o’clock position inside, as Fig.7, add the counterweight.

Fig. 6 Fig. 7

4.2.7. After finishing mounting the counterweights, put down the guard and press START, to perform balancing spin again, if comes out 00 00，means balancing succeed. (Fig.8)

Fig. 8

4.3. ALU－S1 mode

This mode is used for special rim, if ALU1/ALU2 can not be used, you should choose ALUS mode.

Input aI, aE, d value

- Set “aI”: pull gauge out let the gauge head touch the position of FI for 4 seconds, may press and and to change.
- Set “aE”: pull gauge out let the gauge head touch the position of FE for 4 seconds ， may press and and to change.
- Set “dI”: read from rim, may press and and to change.

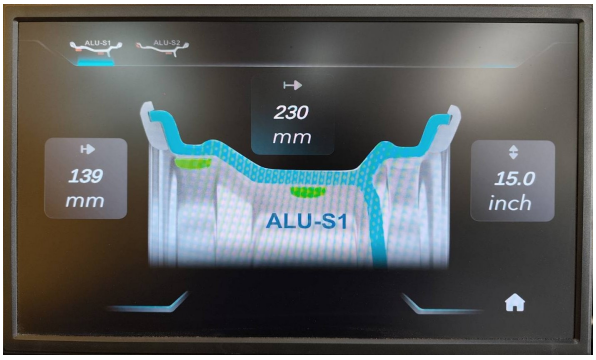

Fig. 9

Put down the guard and press START to perform a measuring spin.

4.3.1. 6o’clock position to add weight

Press , until the right LED lit up full, add weight on 6o’clock position (Fig.10)

Press , until the left LED lit up full, add weight on 6 o’clock position (Fig.11)

Fig. 10

Fig. 11

After finishing mounting the counterweights, put down the guard and press START, to perform balancing spin again, if comes out 00 00，means balancing succeed. (Fig.12)

Fig. 12

4.4. ALU-S1 split function

Note: Only ALU-S mode can use this function. And Operator must be experienced.

1		When the result is displayed in ALU-S mode, press the > key, select , and then press ^
2		Through the < and > input wheel number, then press START

3		Keep the next spock(either direction is ok) on the position of 12 o'clock, press START
4		Press key until the outer imbalance SP1 indicator light is fully on
5		Press key until the outer imbalance SP2 indicator light is fully on
6		Press key until the imbalance indicator light on the inside side is fully lit
7		Put down safe guard and press START, after spin stop
SP succeed		

5.Machine Setting and Self-calibration

Select the , press key to enter the program. There are 11 main menus, with and keys,

for selection, STOP exit

5.1Self diagnosis

Press >		press ^

Order	Function	Function normal
1	Position pick up board	POS changes in 0-127
2	Pressure sensor	Use hand to press main shaft, 4X-4X 6X-6X changes
3	Pressure sensor	Use hand to press main shaft, 4X-4X 6X-6X changes
4	Width potentiometer	left window data is 327-340, turn ruler to another direction, data changes
5	Diameter potentiometer	left window data is 327-340, turn ruler to another direction, data changes

6	Distance potentiometer	Left window data is 327-340, when pull gauge out, the data changes

5.2 instructions

Press >	?	press ^

5.3 Video

Press >		press ^

5.4 Rim distance gauge calibration

Press >	A	press ^

1		operation>	pull gauge to position “0” and hold, press START
2	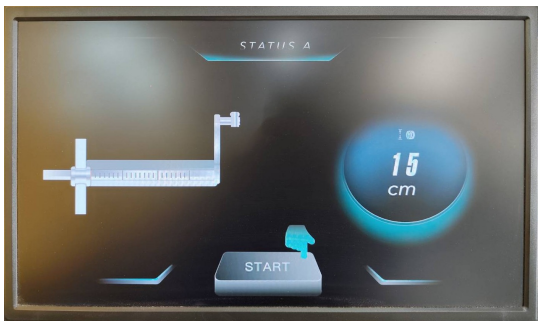	operation>	pull gauge to position “15” and hold, press START
3		operation>	Calibration finished

5.5. Radar Calibration of width gauge (No tyres need to be installed)

Press >	W	press ^

1	 Keep the shield in position	omes>	
Width gauge calibration finished			

5.5.1 width compensation

Tire installation required note (known tire width)

1	A value must be entered	explain>	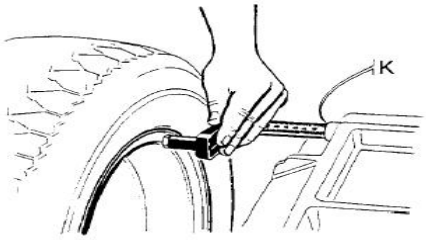 fig. 20b
2	We're aiming the radar at the tires	explain>	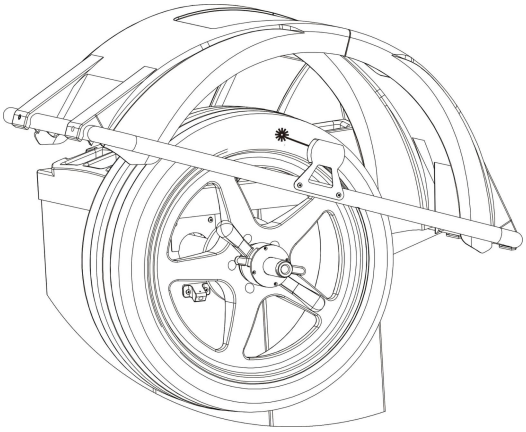
3	Press > + ^ and v at the same time to modify the known tire width		
Put down the key to save automatically			

5.6.Calibration of diameter gauge (Install a tire)

Press >	D	press ^

1	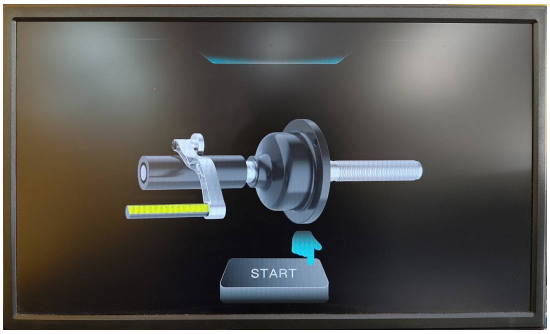	operation＞	Pull the position of the transmission shaft sleeve of the ruler, keep it still, and then press START
2	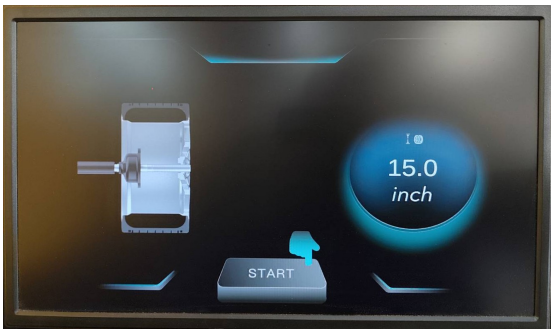	operation＞	Enter diameters by ∧ and ∨, then press START keys to confirm.
3		operation＞	move gauge to touch the edge of rim and keep still, press START keys to confirm.
4		operation＞	Calibration finished

5.7 Calibration of laser (If have)

Press ＞		press ∧

1		operation＞	START keys to confirm.
2		operation＞	By ∧ and ∨, the laser is aligned
3		operation＞	START keys to confirm.
4		operation＞	Calibration finished

5.8. Self-calibration

5.81 Self-calibration of wheel balancer

5.82 Turn on balancer, install a medium size wheel (14″-18″)which can use clip-on weight, set “a b d” value, then

Do the self-calibration whenever you think the balancer is not accurate. The 100g weight must be accurate.

Select the , press

Press		press

1		operation＞	Put down safe guard or press start spin, after spin stop
2		operation＞	Open the safe guard and clip a 100 gram weight on the outside 12 o'clock position, put down safe guard and press to start spin, after spin stop
3		operation＞	Open the safe guard and clip a 100 gram weight on the inside 12 o'clock position, put down safe guard and press to start spin, after spin stop
4		operation＞	Calibration finished

5.9 Unit of weight

Press and key		Press the key to modify	

5.10 Unbalance display threshold

Press < and > key	5g	Press the ^ key to modify	10g

5.11 mm/inch conversion (not saved)

Press < and > key	inch	Press the ^ key to modify	mm

6. Errors

Various abnormal conditions can arise during machined operation by the microprocessor, if comes the errors, must stop operation, find the reason and the solution according, if the error persists, consult the supplier.

No.	Errors	Reasons	Solution
1	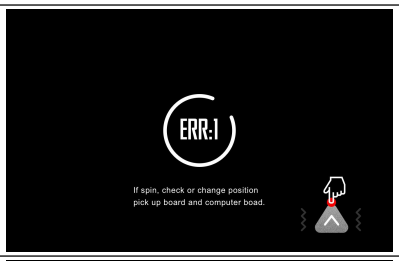	1. No spin 2. Shaft spin	1. If no spin, check or change power board 2. If spin, check or change position pick up board and computer board 3. Adjust position pick up board support
2		1.No wheel or wheel not locked tightly 2.Position pick up board problem	1.Lock tightly 2.Check or change position pick up board
3		1. No enough pressure in wheel 2. Wheel distortion	1. Add proper pressure in wheel 2. Check wheel
4	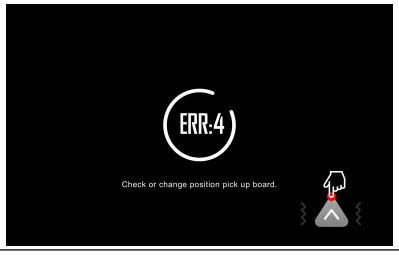	1. Position pick up board problem 2. Computer board problem	1.Check or change position pick up board 2.Check or change computer board

Felice

5		1. Micro switch problem 2. Computer board problem	1.Check or change Micro switch 2.Check or change computer board
6		1. Power board problem 2. Computer board problem	1.Check or change power board 2.Check or change computer board
7		1. Program lost 2. Computer board problem	1.Self calibration 2. Check or change computer board
8		1. No add 100g weight during self calibration 2. Computer board problem 3. Power board problem	1. Add 100g weight 2.Check or change computer board 3.Check or change power board
9	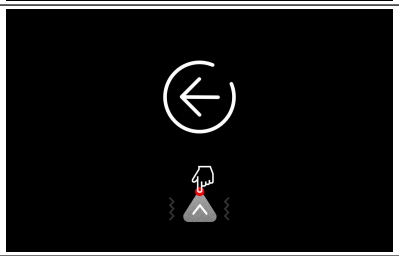	emergency stop	return
10		Data protection	1. Contact vendor unlock 2. Update data

Felice

7. OPT function

Note: When unbalance value is too much, choose OPT, and operator must be experienced.

Install wheel, input a b d value

1	Press the key, select , and then press	comes＞	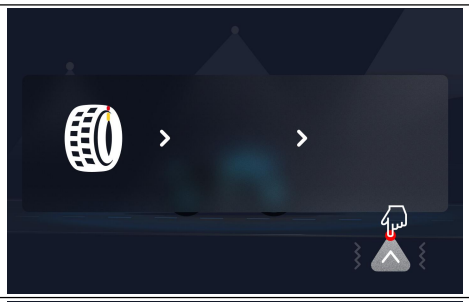
2	Put down safe guard and press	comes＞	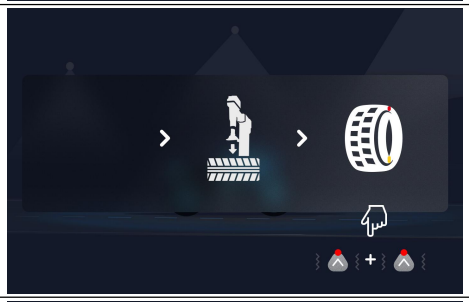
3	With the help of tire changer, change the rim and rubber 180 degree , press	reference＞	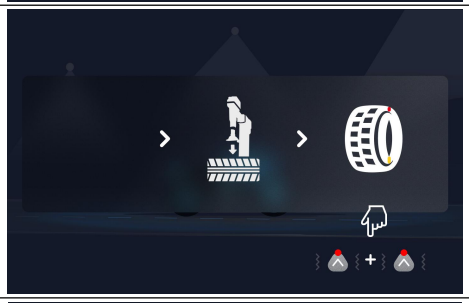
4	Then put down safe guard and press START	comes＞	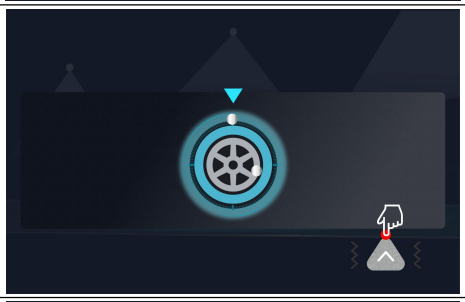
5	Rotate wheel until four indicators lit up (two on both sides, the dark spot in the right side picture), mark the position C with chalk on rubber	reference＞	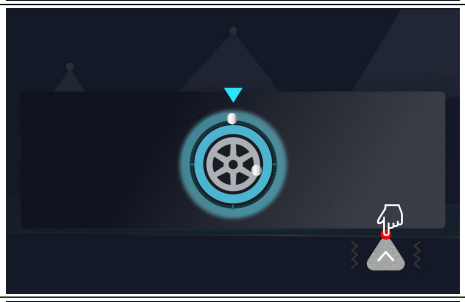
6	Press Rotate wheel until two indicators lit up (one on both sides, the dark spot in the right side picture), mark the position D with chalk on rim	reference＞	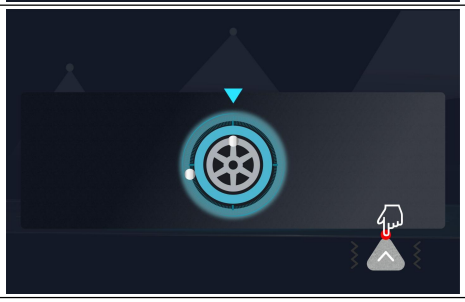

Felice

7	Press ^ with the help of tire changer, change the rim and rubber to make C and D match	reference＞	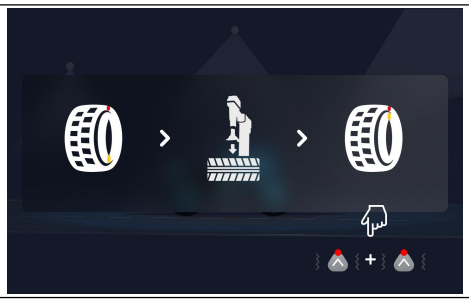
8	Put down safe guard and press START	comes＞	If unbalance is less than before, OPT succeed